Cabinet Free Universal Handrail Instructions

PART LIST

1 @ Handrail Tube Assembly	1 @ Cabinet Free Bracket Assembly
1 @ Cabinet Bracket	1 @ Sliding Support Bracket
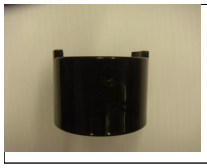 1 @ Black PVC Pivot Stopper	4 @ 1” Black Cabinet wood Screws
4 @ 3/4” Black Tek Screw (Pivot Stopper)	4 @ 3/4” Black Tek Screw (Cabinet Bracket)
1 @ Phillips Driver	1 @ 3/4” 1/8” Drill Bit
4 @ M10 Washers (Cabinet Bracket)	4 @ M10 Nuts (Cabinet Bracket)
4 @ Black PVC Push Caps	

NOTE: THE ABOVE ARE ESSENTIAL COMPONENTS, HOWEVER WE DO ADD SOME EXTRA QUANTITIES AS WELL JUST FOR BACKUP.

Cabinet Free Universal Handrail Instructions

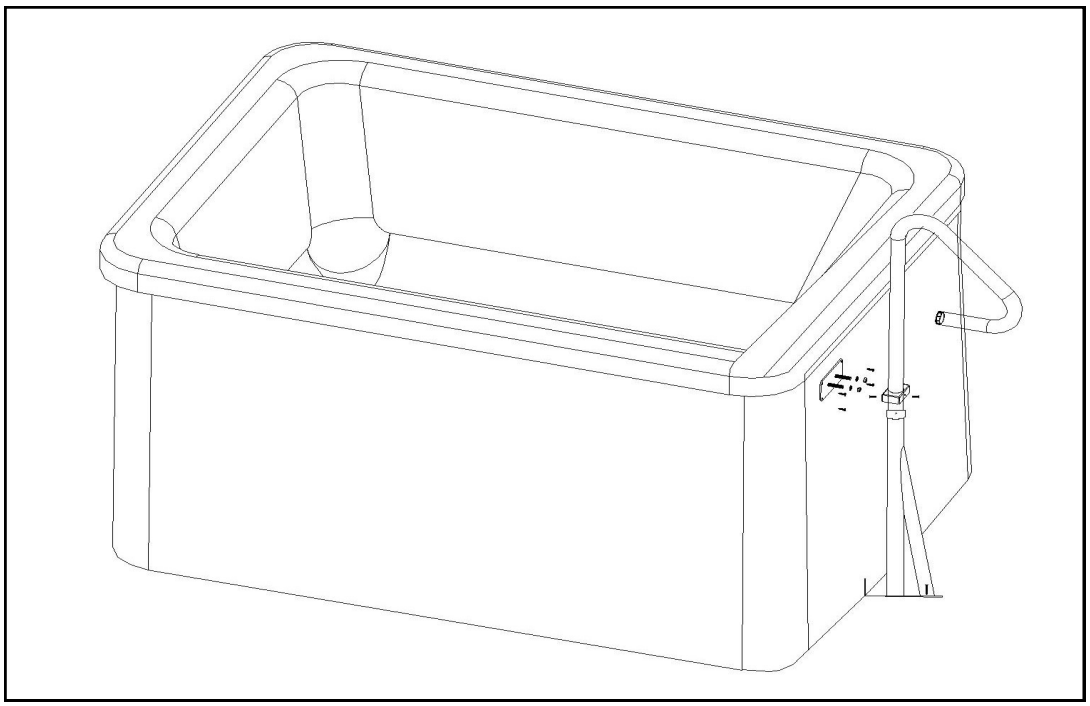

***Make sure that you have all the parts from the parts list**

***Note: Determine where you are going to enter and exit your spa**

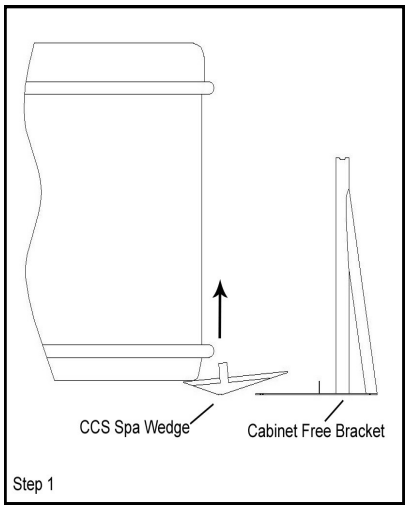

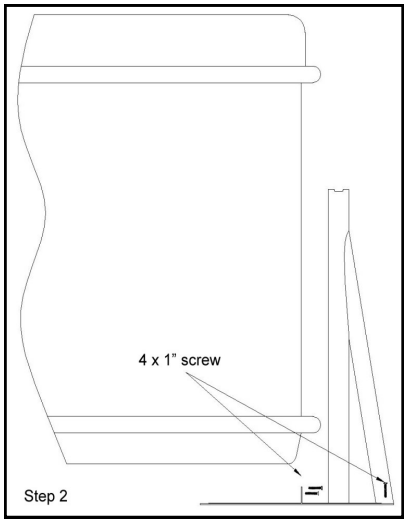

STEP 1:
Raise and block spa **(recommend using a CCS leisure "spa wedge")** to place bracket under spa in your desired location. Confirm that the bracket is straight and square, lower spa back onto bracket.

STEP 2:
Secure bracket by screwing it to the spa floor OR deck with the screws provided.

STEP 3:
Slide the sliding bracket onto the handrail

STEP 4:
Slide the Pivot Stopper onto the bottom of the handrail, with the locking tabs facing down.

STEP 5:
Slide hand rail into the bracket, adjust accordingly to the appropriate height (to easily step in and out of your spa). Make sure that the locking tabs on the shaft collar are seated in the cut outs, and that the handle of the safety rail is facing the inside of the spa. Then fasten Pivot Stopper collar in place with the tek screws provided.

Cabinet Free Universal Handrail Instructions

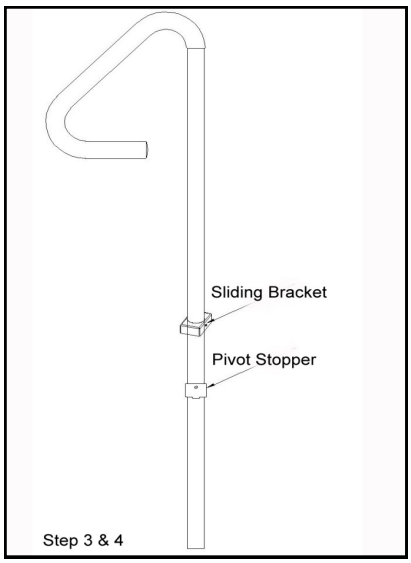

STEP 6:
Secure stabilizing Sliding bracket to outside of spa cabinet. (NOTE: Slide the bracket over the Cabinet Mount Stabilizing bracket bolts and clamp it with a nut and washer provided on each side.)
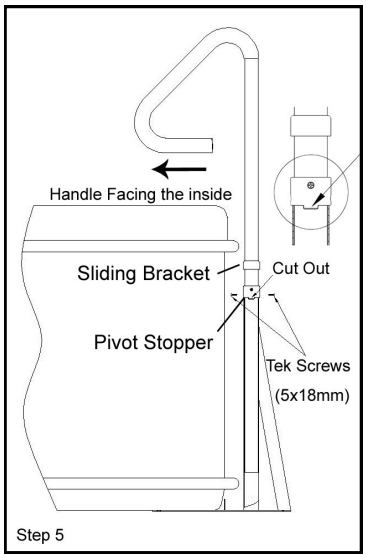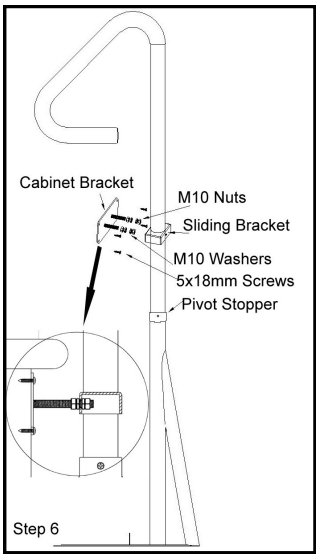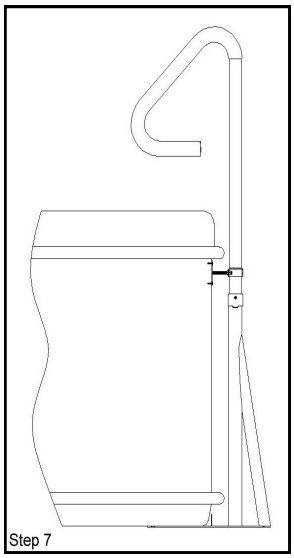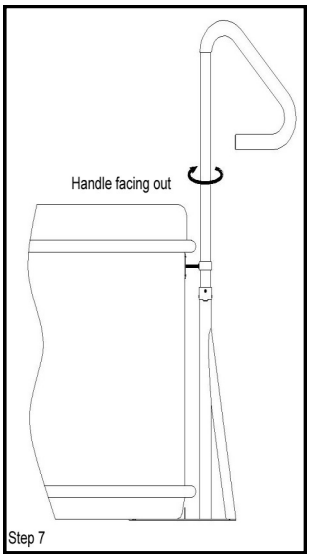
STEP 7:
The safety rail should be able to swing **180º** and lock, making it convenient to enter and exit your spa.